HEAVY-DUTY COMMERCIAL BIN

660L Wheelie Bin

Built for industrial and high-density urban use. Weatherproof, chemical-resistant and compatible with standard DIN lifters.

From **$402** per unit ex. GST (5+ units)



660 L	330 kg	100% HDPE	7 colours
Capacity	Safe working load	Material	Available

OPTIONS

Colours, branding & add-ons

SEVEN BODY COLOURS



Dark grey



Orange



Yellow



Shadow green

Lime green · Shadow green · Dark grey · Royal blue · Orange · Yellow · Red

CUSTOM BRANDING

METHOD	LEAD TIME	ARTWORK & MINIMUMS	PRICE EX. GST
Laminated stickers	~1 week	Vector file required	**$109.50 / 6 stickers**
Hot press	5–6 weeks	DWG or DXF file · min. 50 units	**$300 + $2.50 / unit**
Screen print	5–6 weeks		**$2.00 / unit**

ROTATOR PLATE





Galvanised steel forklift pockets, bolted to the base for forklift tipping.

Supplied	**+$235**
Supplied & installed	**+$250**

MORE OPTIONS

Non-marking wheels	**+$35**
Lock tabs, standard (supplied)	**+$16**
Lock tabs, heavy duty (supplied)	**+$19.50**

SPECIFICATIONS

Dimensions & specifications

SIDE VIEW

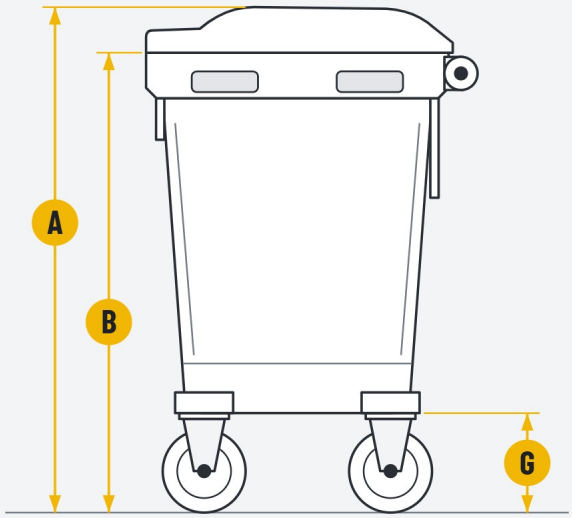

TOP VIEW

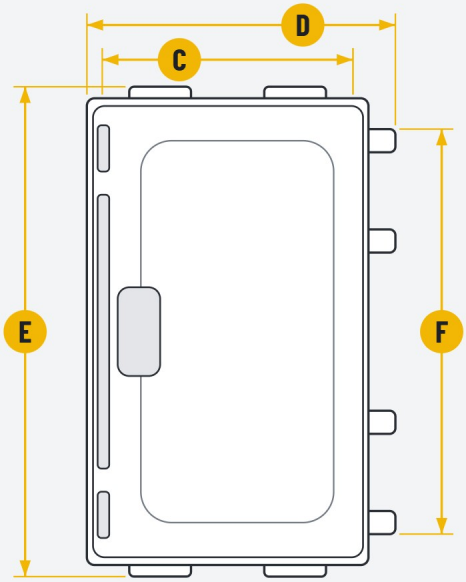

DIMENSIONS (MM)

A	Total height ~	1220
B	Bin height ~	1110
C	Bin depth ~	650
D	Total depth ~	800
E	Total width (incl. handles) ~	1270
F	Handle width ~	1050
G	Castor height ~	240

SPECIFICATIONS

Nominal volume	**660 L**
Material	**100% HDPE**
Safe working load	**330 kg**
Empty weight	**~40 kg**
Wheels	**4 swivel, front brakes**
Lifting	**Standard DIN lifters**
Standards	**AS4123 & EN840**
Storage & shipping	**Stackable**

All dimensions are approximate.

ORDERING

Pricing & delivery

1–4 UNITS

$435

per unit, ex. GST

5+ UNITS

$402

per unit, ex. GST

All prices exclude GST. Delivery price on request; pickup available from Coopers Plains.

LEAD TIMES

Within Brisbane	**From 1–2 days**
Sunshine Coast & Gold Coast	**2–3 days**
Rest of QLD & Sydney	**3–5 days**
Larger quantities (~50+ units)	**5–6 weeks**



Stackable for shipping & storage

The bins are stackable, so they are easy to store when not in use. They also arrive stacked when shipped, saving space on delivery.

Need more capacity?

Our 1100L product brochure is available on request.

Ask for the 1100L brochure

FEATURES

Built tough for commercial sites

A 660 litre wheelie bin made for industrial and high-density urban use. It is weatherproof, chemical-resistant and easy to handle, fits standard DIN lifters, and meets AS4123 and EN840.



Heavy-duty rear hinge

Moulded hinge brackets and a full-length hinge rod hold the lid securely through daily use and lifting.



DIN-compatible rim

Fits standard DIN lifters, with ergonomic grab points moulded into the rim for easy manoeuvring.



Four swivel castors

Four swivel wheels, with brakes on the front pair. Non-marking wheels are available as an option.



Tough 100% HDPE body

Impact and weather resistant, and resistant to UV, heat, frost and chemicals for a long service life outdoors.

IDEAL FOR

- Hotels
- Schools & campuses
- Retail back-of-house
- Warehouses
- Upgrading from smaller bins

Get a quote

BRISBINS

Phone **07 3736 4600**

Email **sales@brisbins.com.au**

Web **brisbins.com.au**

4/32 Sway Street, Coopers Plains QLD 4108